COMPACT EVO AC

Industrial High Power Diode Laser

The Compact Evo AC is an air-cooled diode laser subsystem with up to 500 W continuous-wave output power. It is designed for continuous operation in industrial environments and is delivered as a 19-inch rack-mountable unit. The fiber is permanently attached to the laser unit and ends in an RQB connector, which is compatible with QBH interfaces.

This system uses single-emitter diode laser technology and offers an electrical efficiency above 45%. The air-cooling design removes the need for an external chiller or additional fiber cooling, simplifying installation and maintenance. It delivers a near top-hat beam profile with more than 90% homogeneity. Additional features include fiber plug-in and break monitoring, an integrated red pilot laser, and a DLC controller with logging functions and remote service support.

The Compact Evo AC shares the same user interface as other models in the Compact Evolution Series, allowing for straightforward integration into existing systems. Several process optics and fieldbus communication options are available. It also fulfills Performance Level “e” according to EN ISO 13849-1 safety standards.

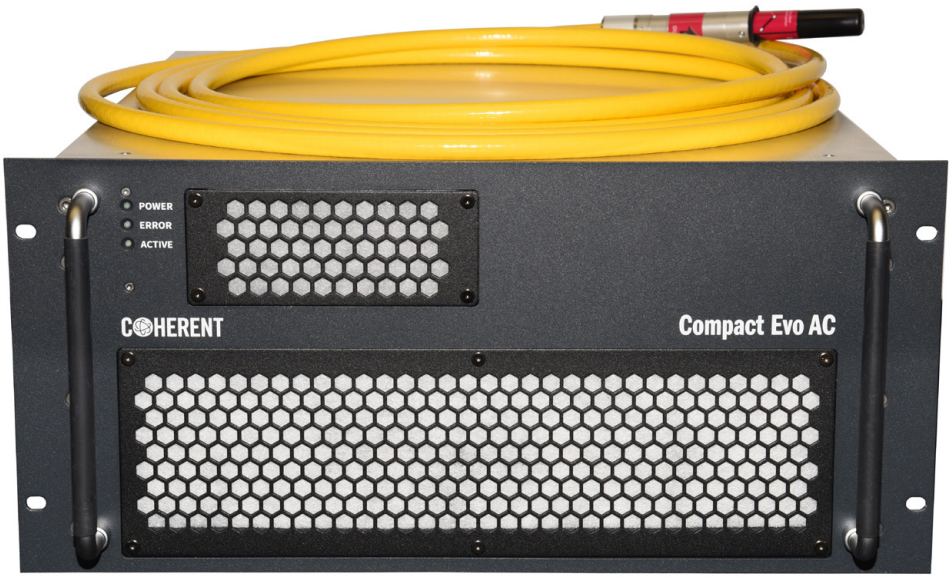

FEATURES

- Easy-to-integrate fiber-coupled system
- 19” rack-mountable unit (5HU)
- High beam homogeneity of tbd mm mrad
- Diode laser control unit (DLC)

APPLICATIONS

- Plastic welding
- Selective Soldering and Brazing
- Heat Treatment

COHERENT

Optical Parameters		
Optical Output Power (W)	300	500
Stability Over 24-hour (Room ΔT = ± 0.5 K) (%)	<2	
Wavelength (nm)	980	
Wavelength Tolerance (nm)	±10	
Pilot Laser		
Wavelength(nm)	640	
Output Power (Laserklasse)	3R	
Fiber Parameters		
Fiber Connector Type	RQB (QBH Compatible)	
Numerical Aperture (NA)	0.22	
Fiber Core Diameter (µm)	300	
Fiber Length (m)	5, 10	
Electrical Parameters		
Operating Voltage (V)	110-240	
Frequency (Hz)	50/60	
Power Consumption (kVA)	0.8	1.2
Overall Efficiency (Without Cooling Unit) (%)	>41	>45
Max. Repetition Rate (Hz)	1000	
Modulation Pulse Width (Min. Value) (µs)	>500	
Modulation Rise/Fall Time (Min. Value) (µs)	<200	
Thermal Parameters		
Ambient Temperature in Operation (100% DC) (°C)	15 to 40 (<90% humidity)	
Storage Temperature (°C)	0 to 50	
Interfaces		
Standard Configurations – Analog/Digital	0-10 V Analog Power Setting	
Interface (V)	24 V Digital Signals	
Options	EtherCAT, CANopen, RS232	
Mechanical Parameter		
Dimension [w x h x d] (Inch x mm x mm)	19 inch x 221.5 x 497 19 inch x 221.5 x 997 (Incl. Bending Radius of Fiber)	
Weight (Including Water/Air-Chiller) (kg)	<35	
Protection Class	IP52	

MECHANICAL SPECIFICATIONS

Compact Evolution AC

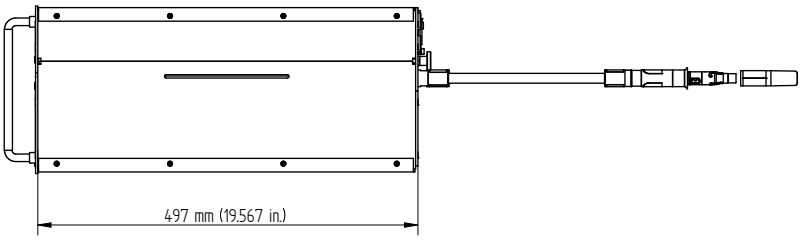

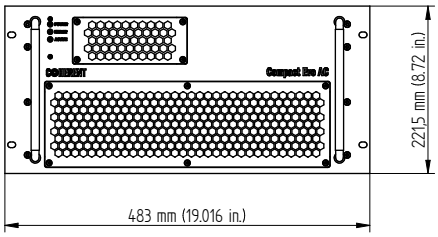

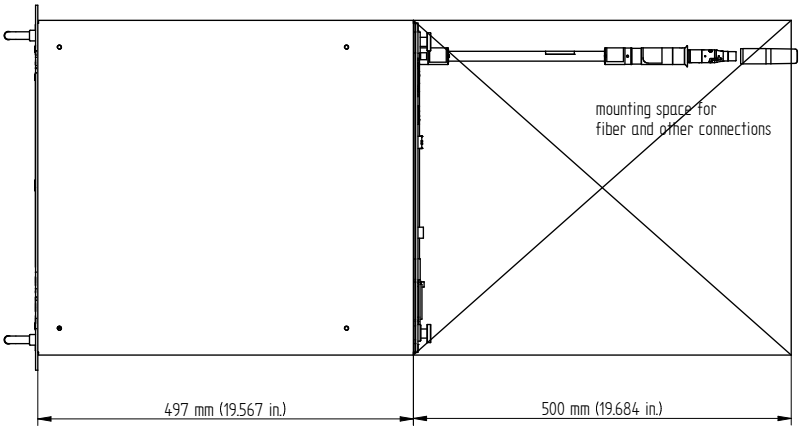

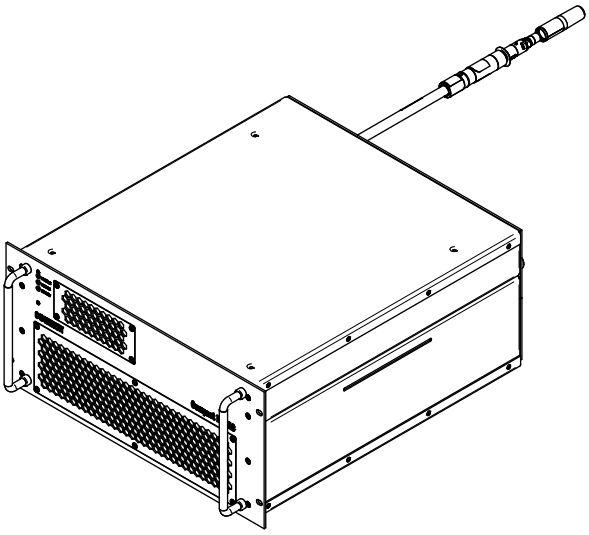

© 2026 Coherent, Corp.
Legal notices: coherent.com/legal
MC-022026#AA

For more information:
www.coherent.com